1 AXIS SOLAR TRACKER H14

Data Sheet

TESTED AND RELIABLE

Over 300 MW installed within the last 5 years all around the world of our fixed structures, Single/ Dual Axis Solar Trackers guarantee our design & engineering, our project management and our commitment to quality and customer satisfaction.

ADAPTABLE AND VERSATILE.

All the dimensions of the tracker can be adjusted to the terrain slope (up to 10% depending on the hemisphere where the solar plant will be located) and also to fit different types or sizes of solar modules. This makes, *The 1 Axis Solar Tracker H14* a totally **CUSTOMIZABLE STRUCTURE ACCORDING TO OUR CLIENTS NEEDS.**

OUR CLIENTS.

THE TRACKER OFFER UP TO 20% HIGHER EFFICIENCY THAN A FIXED STRUCTURE, with a simple design making this tracker a reasonable option.

ENERGÍA ERCAM

H14.72.HR.090702.PE

Technical Data				
Structure:	H14.72.HR.090702.PE			
Material:	S275JR or equivalent / Aluminium 6061-T6			
Coating:	Structure	Hot Dip Galvanized		
	Fasteners	Minimum resistance of 500 hours in salt fog test.		
Beams:	7 Beams (6 beams of 9 PV modules & 1 beam of 6 PV modules).			
PV modules:	9 Landscape 2x1m			
PV modules allowed:	✓ Crystalline.	✓ Thin film.	✓ Other sorts	
Support system:	✓ Hammered piles	✓ Concrete Micro-piles	✓ Concrete Foundations	✓ Ground Screw
Axis:	G1 (East-West): +/-45º			
Norms & regulations:	Structural calculations according to the local norms and regulations. **Wind speed design: 140 km/h (able for 160km/h or higher wind speeds).**			
Engine consumption:	0.37KWh/day			
Max. Slope in North Hemisphere:	Toward North: 0,75%	Toward South: 10%		
Max. Slope in South Hemisphere:	Toward North: 10%	Toward South: 0,75%		
Actuation system:	2 hydraulic cylinder per tracker (Biodegradable Oil)			
Efficiency	Up to 20% higher than a fixed structure; depending on the location			

CUSTOMIZATION AND DESIGN FOR EACH PROJECT.

As a function of technical requirements, tracker design can be easily tuned changing geometry and parameters such number of pillars, number and dimension of panels, to achieve the best option for each project.

The number of beams (structure between pillars) is customizable and also the solar panels that can be assembled on the tracker can be set up for each project.

All the structures are designed and calculated following all the local norms and regulations (ASCE07, Euro-Code, SANS, etc.). In addition, the anticorrosive coating treatment is certified and a high quality fastener and bolts (Quality 8.8 SAE) are used.

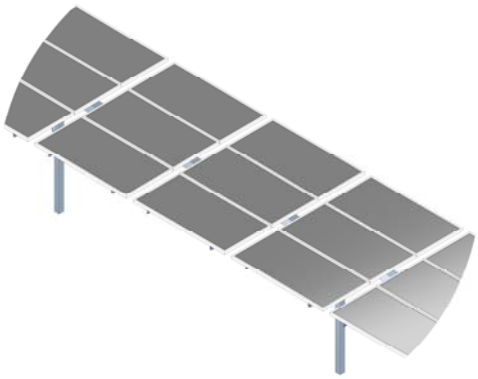

FOUNDATIONS / SUPPORT SYSTEM

Due to the different characteristics of the grounds, our company has adapted tracker design to be compatible with the different foundation systems such as concrete footings, hammered piles or concreted micro-piles to meet the technical requirements applicable in each country, making both our Fixed Structures and Single/ Dual Axis Trackers highly adaptable to any kind of soil.

Ercam products combine an optimal performance with a high durability, long-term reliability & minimal maintenance operations.

CONTROL SYSTEM

Through Master PLC which is connected with the slave PLC´s using a communication protocol designed by ERCAM for highest reliability.

Internal connection - via cable between Master PLC and the slaves using ERCAM_BUS protocol.

Actuation system: Double effect hydraulic system.

TRACKING SYSTEM

Tracker type: North– South horizontal axis

Rotation capacity: +/- 45°.

The PLC is programmed after an astronomic based sequence.

Features a backtracking algorithm preventing shadows between trackers.

OWN MANUFACTURING FACILITIES

By manufacturing our designs in the facilities that we´ve got in **Spain, South Africa** and **India** we assure the optimum final prices and **maximum value for our customers**.

ERCAM´S KNOW-HOW

Our long records in the solar market, our portfolio of international projects, our engineering & design team equipped with the most advanced analytical systems and our highly experienced board of directors allow Energía ERCAM to be one of the few companies operating in this market.

OUR STRUCTURES EVER ARE:

- Environmental friendly.
- Quietly.
- Service life of 25 years.

1 Axis solar tracker photovoltaic solar field in Spain. 3 solar modules frames.

Energía ERCAM

The company was founded in Spain in 2000 to meet the needs of the Spanish renewable solar energy market. Since the very beginning, *ERCAM* has focused on becoming a leading and dominant tracker supplier for the photovoltaic solar market. *ERCAM* has developed its own fix structures, single axis trackers and dual axis trackers. Our engineering & design division constantly works to optimize and improve our products.

At present, 300 MW of *ERCAM* solar trackers have been installed in different places around all the world, like Spain, France, Greece, Israel, Italy, South Africa, Algeria, Romania U.S.A, India or Chile.

ENERGÍA ERCAM
P.I. Cabanillas nº 1 - Parcela 1,
Nave nº 66, Fco. De Medina y Mendoza 19171 Guadalajara/Spain
Tel: +34 949 201 699
Fax: +34 949 200 699

ERCAM SOUTH AFRICA (Pty)Ltd
19 Jellicoe Avenue,
Epping 1, 7460,
Cape Town, South Africa
Tel: +27 21 531 9815
Fax: +27 21 531 3735

InfiniteERCAM Harvesting the Sun
S-16, 1st Floor, SIDDHARTH, 15th Main Road, Thiru – Vi – Ka Industrial Estate, Guindy, Chennai - 32
Tel: +91 44 45532153
Fax: +91 44 42120230

1 Axis Solar Tracker
H14.72.HR.090702.PE

ENERGÍA ERCAM

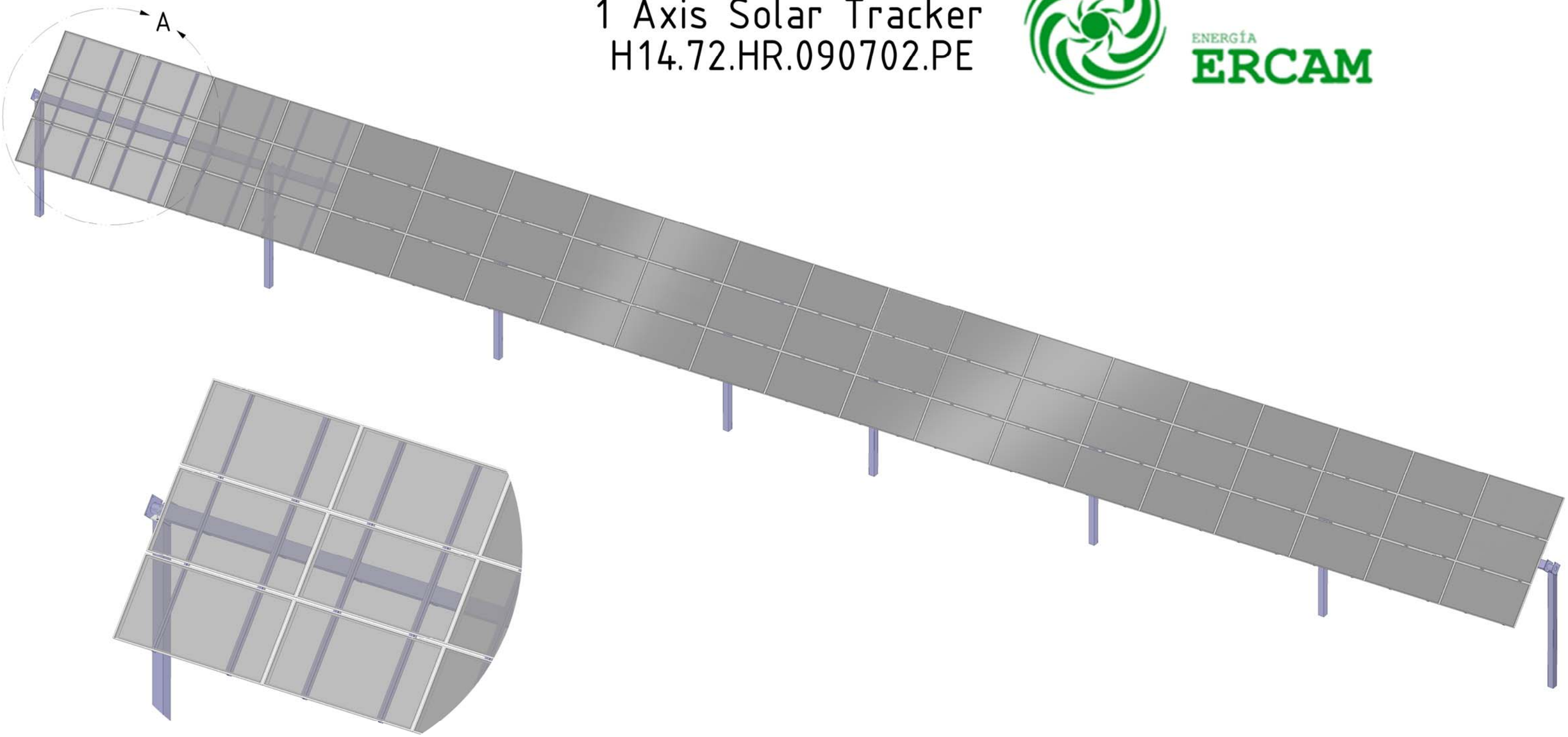

DETAIL A

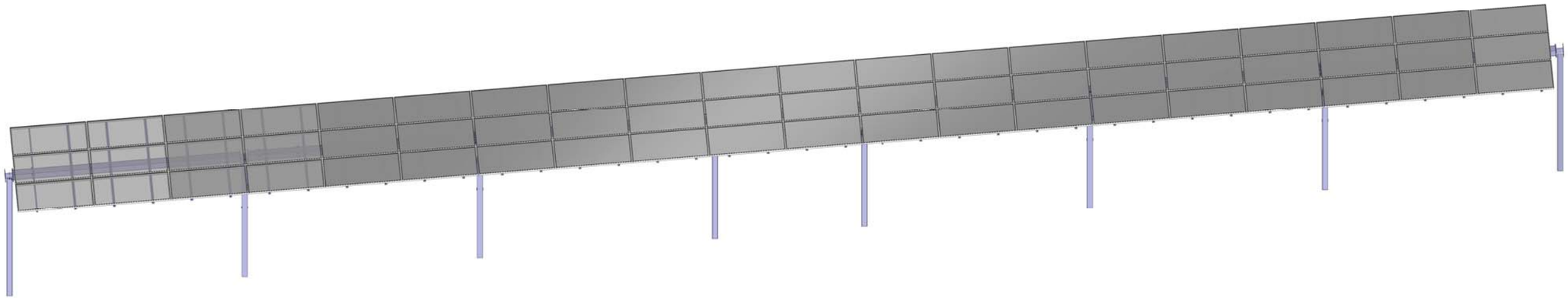

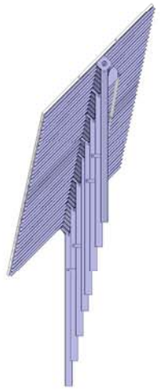

1 Axis Solar Tracker
H14.72.HR.090702.PE

ENERGÍA ERCAM